Digital Electronic Circuits (EC2L004)

Lecture 14: Sequential Circuits: Design Procedure

Learning Objectives

- Design Procedure
  - Synthesis using D Flip-Flops
  - Synthesis using J-K Flip-Flops
  - Synthesis using T Flip-Flops

Problem 1:

- Design a circuit that detects a sequence of three or more consecutive 1's in a string of bits coming through an input line.

Solution 1:

- State diagram for sequence detector

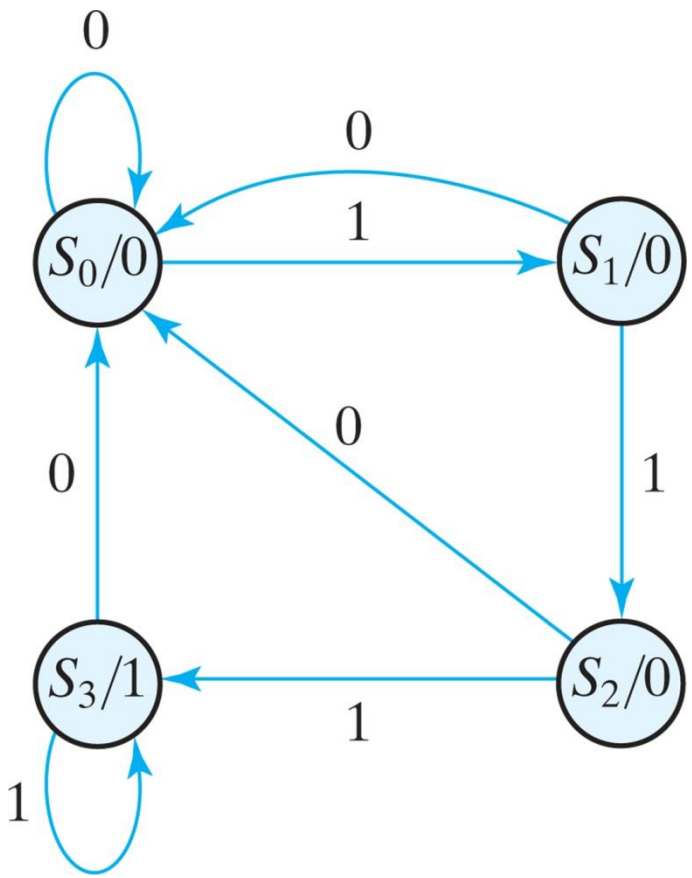

Solution 1: Cont'd

- State Table for Sequence Detector

Table 5.11
State Table for Sequence Detector

Present State		Input	Next State		Output
A	*B*	*x*	*A*	*B*	*y*
0	0	0	0	0	0
0	0	1	0	1	0
0	1	0	0	0	0
0	1	1	1	0	0
1	0	0	0	0	0
1	0	1	1	1	0
1	1	0	0	0	1
1	1	1	1	1	1

Solution 1: Cont'd

- State Table for Sequence Detector

Table 5.11
State Table for Sequence Detector

Present State		Input	Next State		Output
A	*B*	*x*	*A*	*B*	*y*
0	0	0	0	0	0
0	0	1	0	1	0
0	1	0	0	0	0
0	1	1	1	0	0
1	0	0	0	0	0
1	0	1	1	1	0
1	1	0	0	0	1
1	1	1	1	1	1

Solution 1: Cont'd

- K-Maps for sequence detector

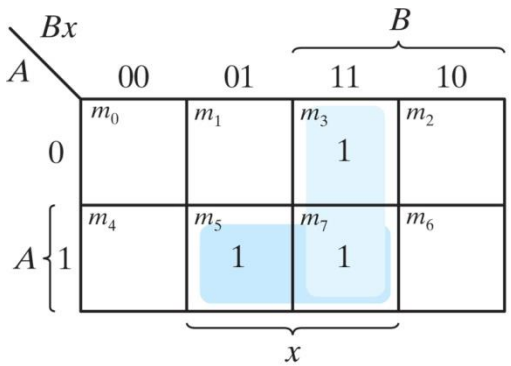

$D_A = Ax + Bx$

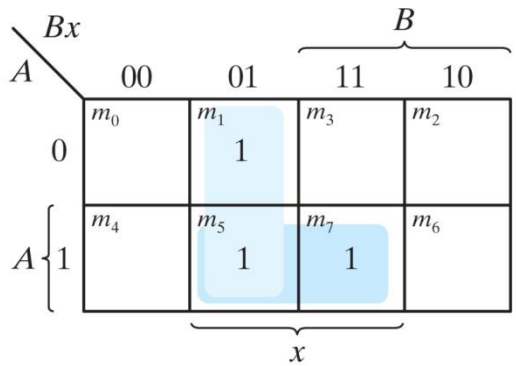

$D_B = Ax + B'x$

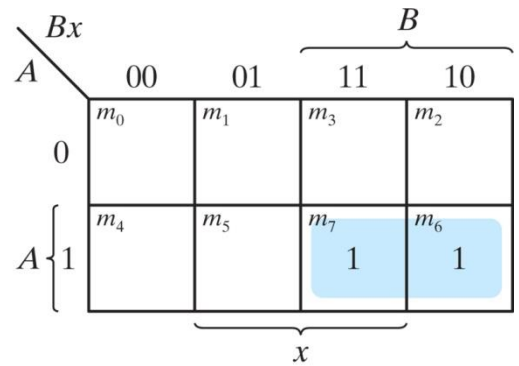

$y = AB$

Solution 1: Cont'd

- Logic diagram of a Moore-type sequence detector

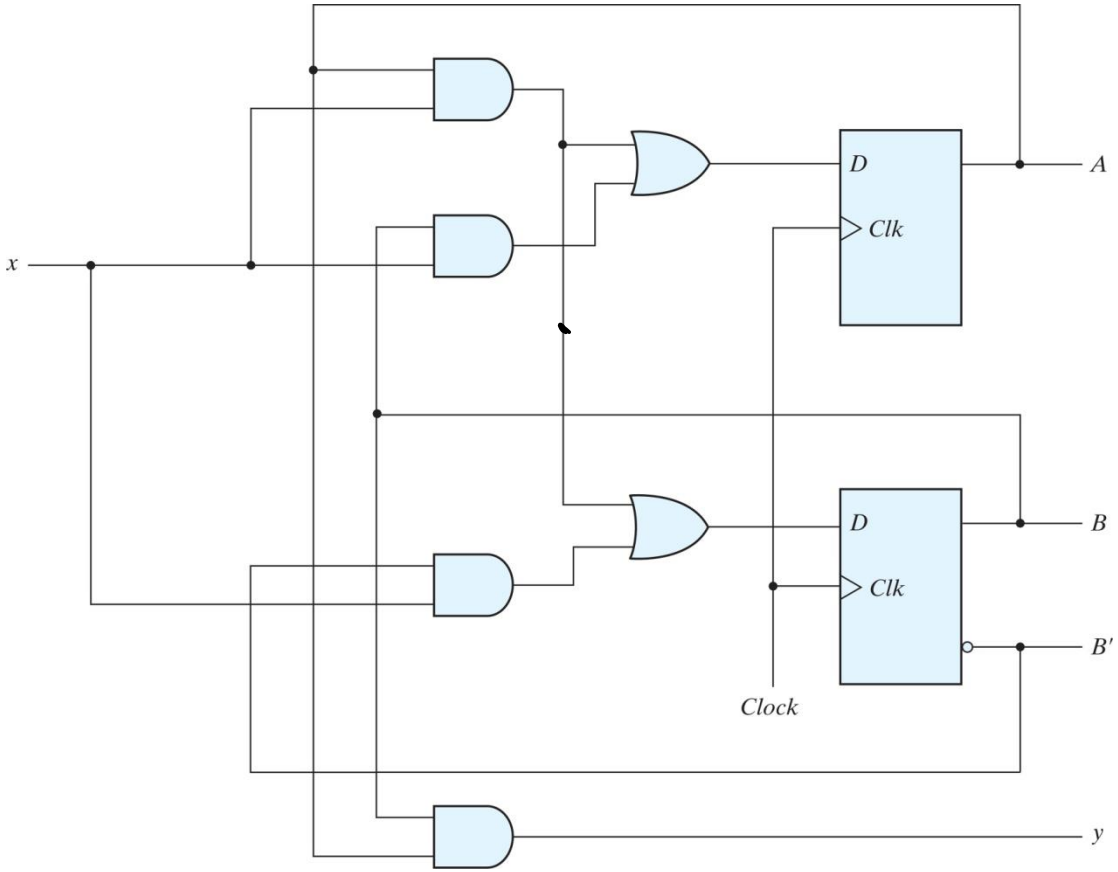

Problem 2:

- Synthesize logic circuit for the state table shown below using J-K Flip/Flops.

Table 5.13
State Table and JK Flip-Flop Inputs

Present State		Input	Next State		Flip-Flop Inputs			
A	B	x	A	B	J_A	K_A	J_B	K_B
0	0	0	0	0	0	X	0	X
0	0	1	0	1	0	X	1	X
0	1	0	1	0	1	X	X	1
0	1	1	0	1	0	X	X	0
1	0	0	1	0	X	0	0	X
1	0	1	1	1	X	0	1	X
1	1	0	1	1	X	0	X	0
1	1	1	0	0	X	1	X	1

Problem 3:

- Design a 3-bit binary counter.
  - An n-bit binary counter consists of n flip-flops that can count in binary from 0 to $2^n - 1$.

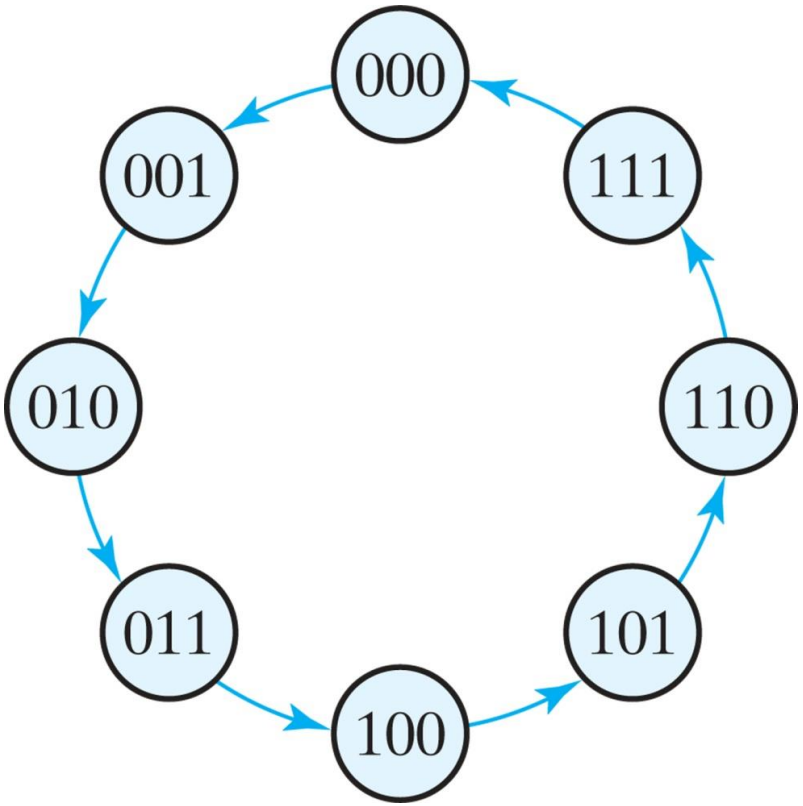

State diagram of three-bit binary counter

Solution 3:

- State Table for Three-Bit Counter

Table 5.14
State Table for Three-Bit Counter

Present State			Next State			Flip-Flop Inputs		
A_2	A_1	A_0	A_2	A_1	A_0	T_{A2}	T_{A1}	T_{A0}
0	0	0	0	0	1	0	0	1
0	0	1	0	1	0	0	1	1
0	1	0	0	1	1	0	0	1
0	1	1	1	0	0	1	1	1
1	0	0	1	0	1	0	0	1
1	0	1	1	1	0	0	1	1
1	1	0	1	1	1	0	1	1
1	1	1	0	0	0	1	1	1

Solution 3: Cont'd

- Maps for three-bit binary counter

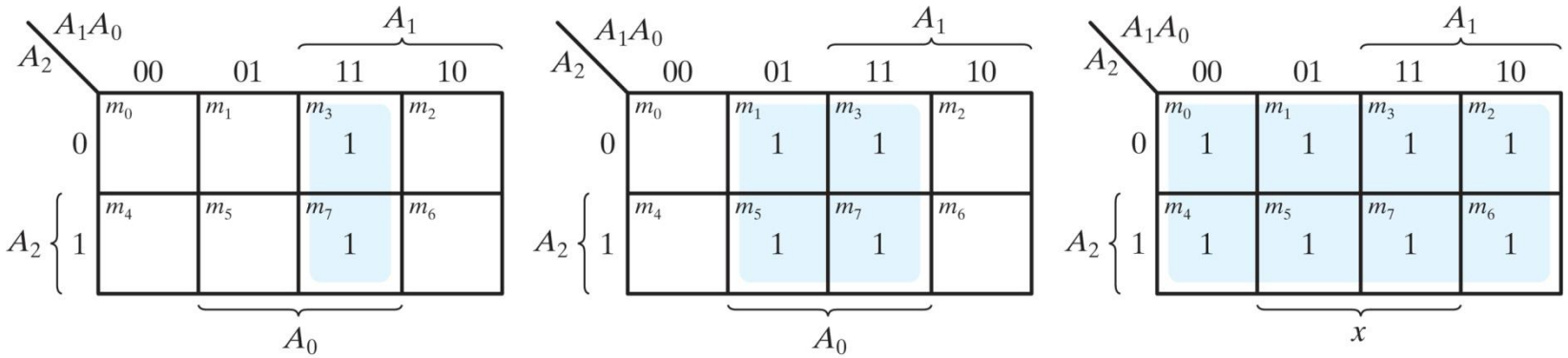

$T_{A2} = A_1A_0$ $\quad$ $T_{A1} = A_0$ $\quad$ $T_{A0} = 1$

Solution 3: Cont'd

- Logic diagram of three-bit binary counter

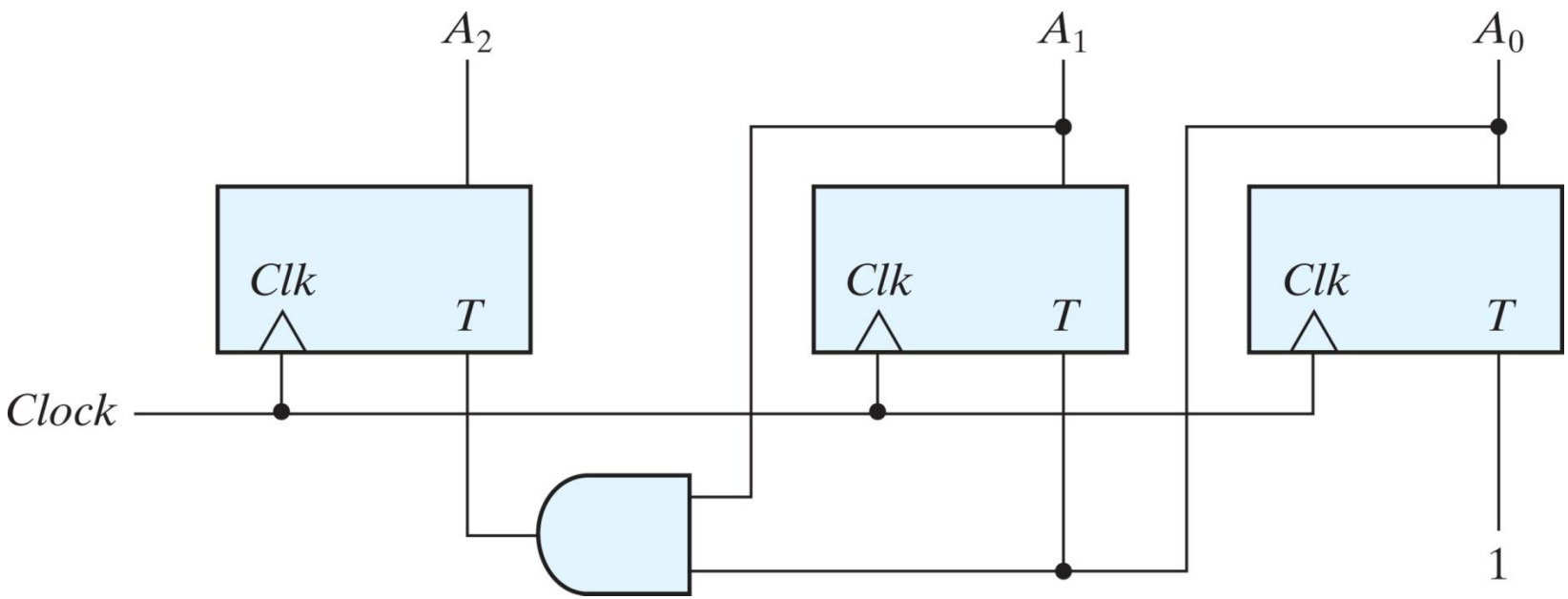

Thank you!!!